TITLE:	PCN	DATE:	DRAWING NO.	REV
HI-RISE 15-36 208-230/60/1, 265/60/1 CXM2 (N) CONTROLS w/ECM CONST. TORQUE	23-0039	1/31/23	96B0434N14	B

Legend

- Factory Low voltage Wiring
- Factory Line Voltage Wiring
- Field Low voltage Wiring
- Field Line voltage Wiring
- Printed Circuit Trace
- Optional Wiring
- Optional Block
- Capacitor
- Circuit Breaker
- Condensate Pan
- Control Board Jumper
- FUSE
- Ground
- High Pressure Switch
- LED
- Low Pressure Switch
- Mate-N-Lock
- Multi Splice Connector
- Optional Overload
- Relay contacts - N.C.
- Relay contacts - N.O.
- Relay / Contactor Coil
- Solenoid Coil
- Splice Cap
- Temperature Switch
- Thermistor
- Wire Nut

ACO	Automatic Change Over
AL	Alarm Relay Contacts
ATS	Air Temperature Sensor
BM	Blower Motor
BMC	Blower Motor Capacitor
BR	Blower Relay / Blower Contactor
CAP	Capacitor
CB	Circuit Breaker
CC	Compressor Contactor
CDT	Compressor Discharge Temperature
CO	Condensate Overflow Sensor
CR	Compressor Relay
CRC	Compressor Run Capacitor
CS	Current Sensor
DHW	Domestic Hot Water
DM	Damper Motor
DTS	Discharge Temperature Switch
EEV	Electronic Expansion Valve
EHC	Electronic Heat Contactor
ES	End Switch
ETC	Electronic Temperature Control
EWT	Entering Water Temp Sensor
FSR	Fan Speed Relay
FSS	Fan Speed Switch
HP	High Pressure Switch
HPWS	High Pressure Water Switch
HR	Heating Relay
JW	Jumper Wire
LAT	Leaving Air Temperature
LOR	Lock Out Relay
LP	Low Pressure Switch
LT1	Sensor, low temp protection, water coil
LT2	Sensor, low temp protection, air coil
LWT	Leaving Water Temp Sensor
MCO	Manual Change Over
MOD	Modulating Water Valve
MS	Manual Starter
MSC	Multi Splice Connector
MWV	Motorized Water Valve
NLL	Night Low Limit Switch
PDB	Power Distribution Block
POT	Potentiometer
P1	Field Wiring Terminal Block
PR	Pump Relay
RAS	Return Air Sensor
RVS	Reversing Valve Solenoid
SAC	Start Assist Capacitor
SAS	Supply Air Sensor
TB	Terminal Block
TRANS	Transformer
UMT	Unit Mounted Thermostat
VFD	Variable Frequency Drive
VSP	Variable Speed Pump
WSTAT	Water Stat

NOTES:

1. Compressor and Blower Motor thermally protected internally.
2. All wiring to the unit must comply with NEC and local codes low voltage wiring shall be Class 2 or equivalent.
3. Field Use Only: Transformer wiring is voltage sensitive. Use layout corresponding to the unit voltage.
4. LT1 provides low temperature protection for WATER. When using ANTI-FREEZE solutions, cut JW3 jumper.
6. 24V Alarm signal shown. For Dry Alarm contact between AL1 & AL2, cut JW1 for CXM/DXM Gen2 or JW4 DXM.
7. Transformer Secondary Ground via control board standoffs and/or Common to Control Box.
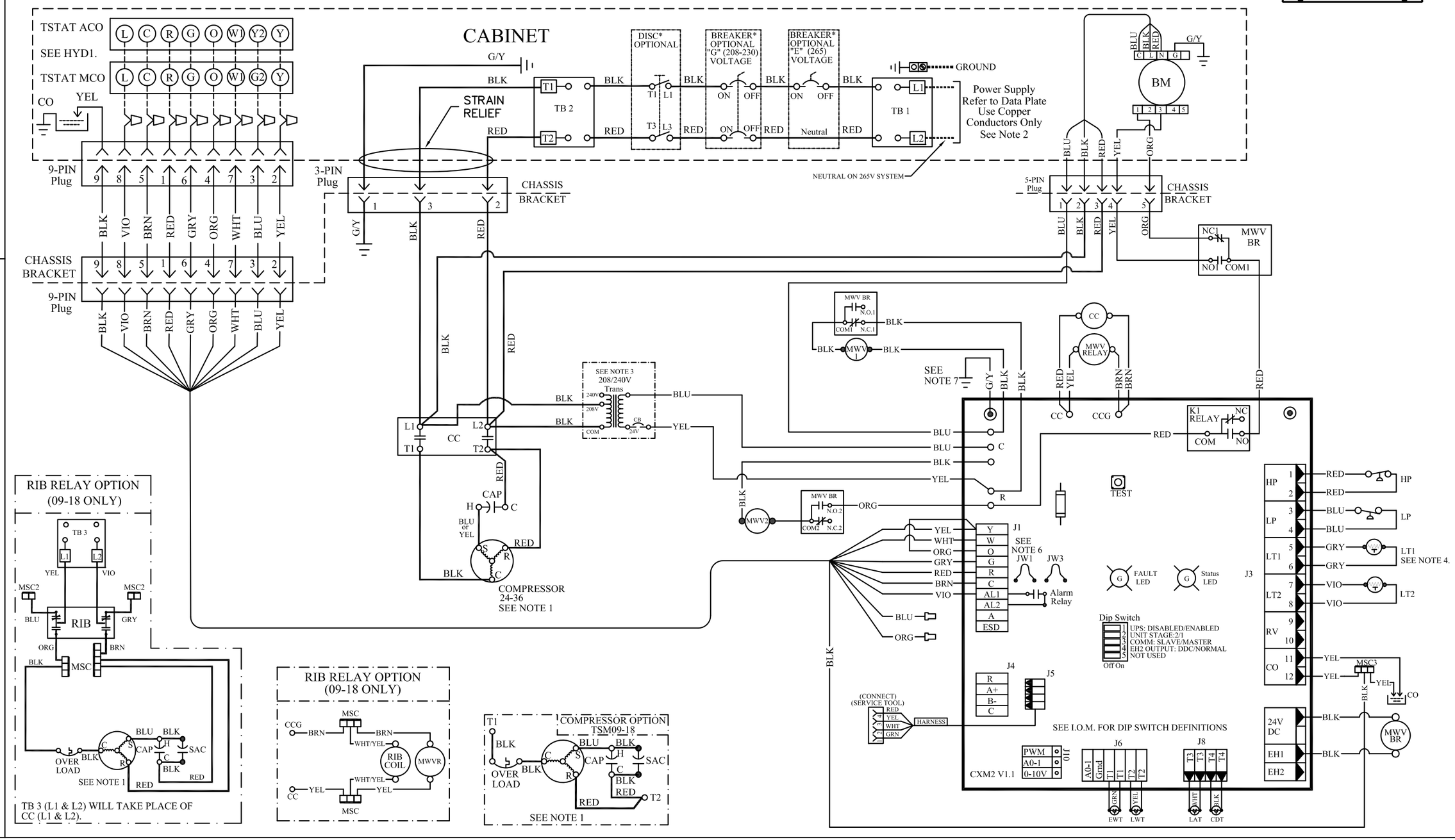
HYD1. Heat/Cool thermostat wiring shown. Refer to thermostat IOM for wiring to the unit. T-Stat wiring must be "Class 1" and voltage rating equal to or greater than unit supply voltage.