TITLE: TMW 036-060 G,E CXM2	PCN 24-0392	DATE: 7/3/24		DRAWING NO. 96B040IN52	REV C

LEGEND

- Factory Low voltage Wiring
- Factory Line Voltage Wiring
- Field Low voltage Wiring
- Field Line voltage Wiring
- Printed Circuit Trace
- Optional Wiring
- Optional Block
- Capacitor
- Circuit Breaker
- Condensate Pan
- Control Board Jumper
- FUSE
- Ground
- High Pressure Switch
- LED
- Low Pressure Switch
- Mate-N-Lock
- Multi Splice Connector
- Optional
- Overload
- Relay contacts - N.C.
- Relay contacts - N.O.
- Relay / Contactor Coil
- Solenoid Coil
- Splice Cap
- Temperature Switch
- Thermistor
- Wire Nut

ACO	Automatic Change Over
AL	Alarm Relay Contacts
CAP	Capacitor
CB	Circuit Breaker
CC	Compressor Contactor
CDT	Compressor Discharge Temperature
CR	Compressor Relay
CRC	Compressor Run Capacitor
CS	Current Sensor
CTS	Cabinet Temperature Sensor
DHW	Domestic Hot Water
DTS	Discharge Temperature Switch
EEV	Electronic Expansion Valve
ES	End Switch
ETC	Electronic Temperature Control
HP	High Pressure Switch
HPWS	High Pressure Water Switch
JW	Jumper Wire
LOR	Lock Out Relay
LP	Low Pressure Switch
LT1	Sensor, Low Temp Protection Source Coil (Heating)
LT2	Sensor, Low Temp Protection Load Coil (Cooling)
MCO	Manual Change Over
MOD	Modulating Water Valve
MSC	Multi Splice Connector
MWV	Motorized Water Valve
NLL	Night Low Limit Switch
PDB	Power Distribution Block
PR	Pump Relay
RVS	Reversing Valve Solenoid
SAC	Start Assist Capacitor
SEWT	Source Entering Water Temp Sensor
SLWT	Source Leaving Water Temp Sensor
TB	Terminal Block
TRANS	Transformer
UMT	Unit Mounted Thermostat
VSP	Variable Speed Pump
WSTAT	Water Stat

NOTES:
1. Compressor and Blower Motor thermally protected internally.
2. All wiring to the unit must comply with NEC and local codes low voltage wiring shall be Class 2 or equivalent.
3. Field Use Only: Transformer wiring is voltage sensitive. Use layout corresponding to the unit voltage.
4. LT1 provides low temperature protection for WATER. When using ANTI-FREEZE solutions, cut JW3 jumper.
5. Typical heat pump thermostat wiring shown. Refer to thermostat IOM for wiring to the unit. T-Stat wiring must be "Class 1" and voltage rating equal to or greater than unit supply voltage.
6. 24V Alarm signal shown. For Dry Alarm contact between AL1 & AL2, cut JW1 for CXM/DXM Gen2 or JW4 DXM.
7. Transformer Secondary Ground via control board standoffs and/or Common to Control Box.
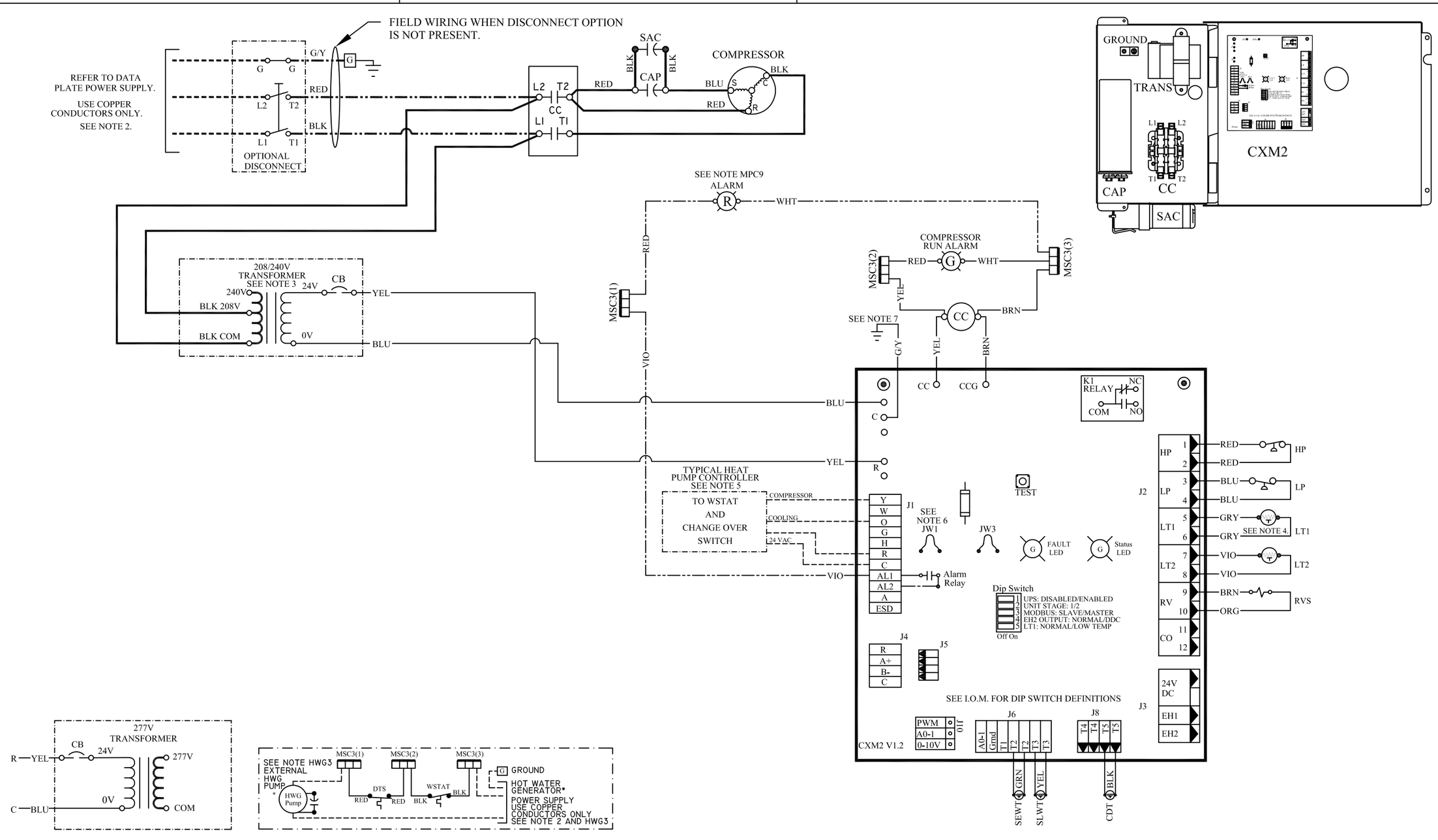
HWG3. WSTAT is supplied with unit and must be wired in series with the hot leg to the pump. WSTAT is rated for voltage up to 277V.
MPC9. When MPC is used, refer to AUX. MPC WD for RED LED wiring