| TITLE: H/V 024-070 460/60/3, 575/60/3, 380-420/50/3 DXM w/LON | PCN 18-0279 | DATE: 07/31/18 | DRAWING NO. 96B0230N04 | REV D |
|---|---|---|---|---|

**LEGEND**

- Factory Low voltage Wiring
- Factory Line Voltage Wiring
- Field Low voltage Wiring
- Field Line voltage Wiring
- Printed Circuit Trace
- Optional Wiring
- Optional Block
- Capacitor
- Circuit Breaker
- Condensate Pan
- Ground
- High Pressure Switch
- LED
- Low Pressure Switch
- Mate-N-Lock
- Multi Splice Connector
- Optional
- Overload
- Relay contacts - N.C.
- Relay contacts - N.O.
- Relay / Contactor Coil
- Solenoid Coil
- Splice Cap
- Temperature Switch
- Thermistor
- Wire Nut

| | |
|---|---|
| AL | Alarm Relay Contacts |
| BM | Blower Motor |
| BMC | Blower Motor Capacitor |
| BR | Blower Relay |
| CAP | Capacitor |
| CB | Circuit Breaker |
| CC | Compressor Contractor |
| CO | Condensate Overflow Sensor |
| CR | Compressor Relay |
| CTB | Common Terminal Block |
| CS | Current Sensor |
| DHW | Domestic Hot Water |
| DM | Damper Motor |
| DTS | Discharge Temperature Switch |
| ES | End Switch |
| EWTS | Entering Water Temp Sensor |
| FP1 | Sensor, low temp protection, water coil |
| FP2 | Sensor, low temp protection, air coil |
| FSS | Fan Speed Switch |
| HP | High Pressure Switch |
| HPWS | High Pressure Water Switch |
| HR | Heating Relay |
| JW | Jumper Wire |
| LAT | Leaving Air Temperature |
| LOC | Loss of Charge Pressure Switch |
| LOR | Lock Out Relay |
| LWTS | Leaving Water Temp Sensor |
| MOD | Modulating Water Valve |
| MS | Manual Starter |
| MSC | Multi Splice Connector |
| MWV | Motorized Water Valve |
| PB | Power Terminal Block |
| PDB | Power Distribution Block |
| POT | Potentiometer |
| P1 | Field Wiring Terminal Block |
| RAS | Return Air Sensor |
| RVS | Reversing Valve Solenoid |
| SAC | Start Assist Capacitor |
| TB | Terminal Block |
| TRANS | Transformer |
| TS | Terminal Strip |
| UMT | Unit Mounted Thermostat |

NOTES:

1. Compressor and Blower Motor thermally protected internally.
2. All wiring to the unit must comply with NEC and local codes low voltage wiring shall be Class 2 or equivalent.
3. Transformer is wired 460V (BLK/RED) lead for 460/60/3 units, 575 (GRY) leads for 575/60/3 or 380V (VIO) lead for 380/50/3. for 415/50/3 switch VIO & BRN leads at L1 & insulate VIO lead.
4. FP1 provides low temperature protection for WATER. When using ANTI-FREEZE solutions, cut JW3 jumper.
5. Typical heat pump thermostat wiring shown. Refer to thermostat IOM for wiring to the unit. T-Stat wiring must be "Class 1" and voltage rating equal to or greater than unit supply voltage.
6. 24V Alarm signal shown. For Dry Alarm contact between AL1 & AL2, cut JW1 for CXM/DXM Gen2 or JW4 DXM.
7. Transformer Secondary Ground via CXM/DXM board standoffs and screws to Control Box.

BM6. Blower Motor is wired for Condensor water Reheat option with stage 1 Blower set on HIGH and stage 2 Blower set on LOW. For any other combination of speeds. at the motor attach BLK wire to the higher of the two desired speed taps and the blue wire to the lower of the two desired speed taps.

BM7. Blower motor is factory wired for high & low speeds. No other combination is available.

LON1. Refer to LON, OR TSTAT Installation, Application, and Operation Manual for control wiring to the unit.

LON2. Optional LON wires. Only connect if LON connection is desired at the wall sensor.

LON3. Factory cut JW1 (CXM) or JW4 (DXM) jumper. Dry Contact will be available between AL1 and Al2.

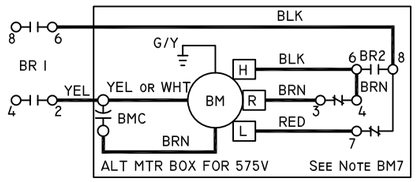


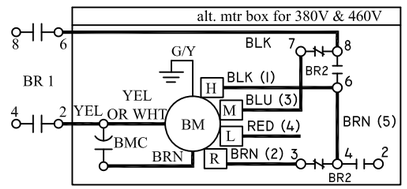


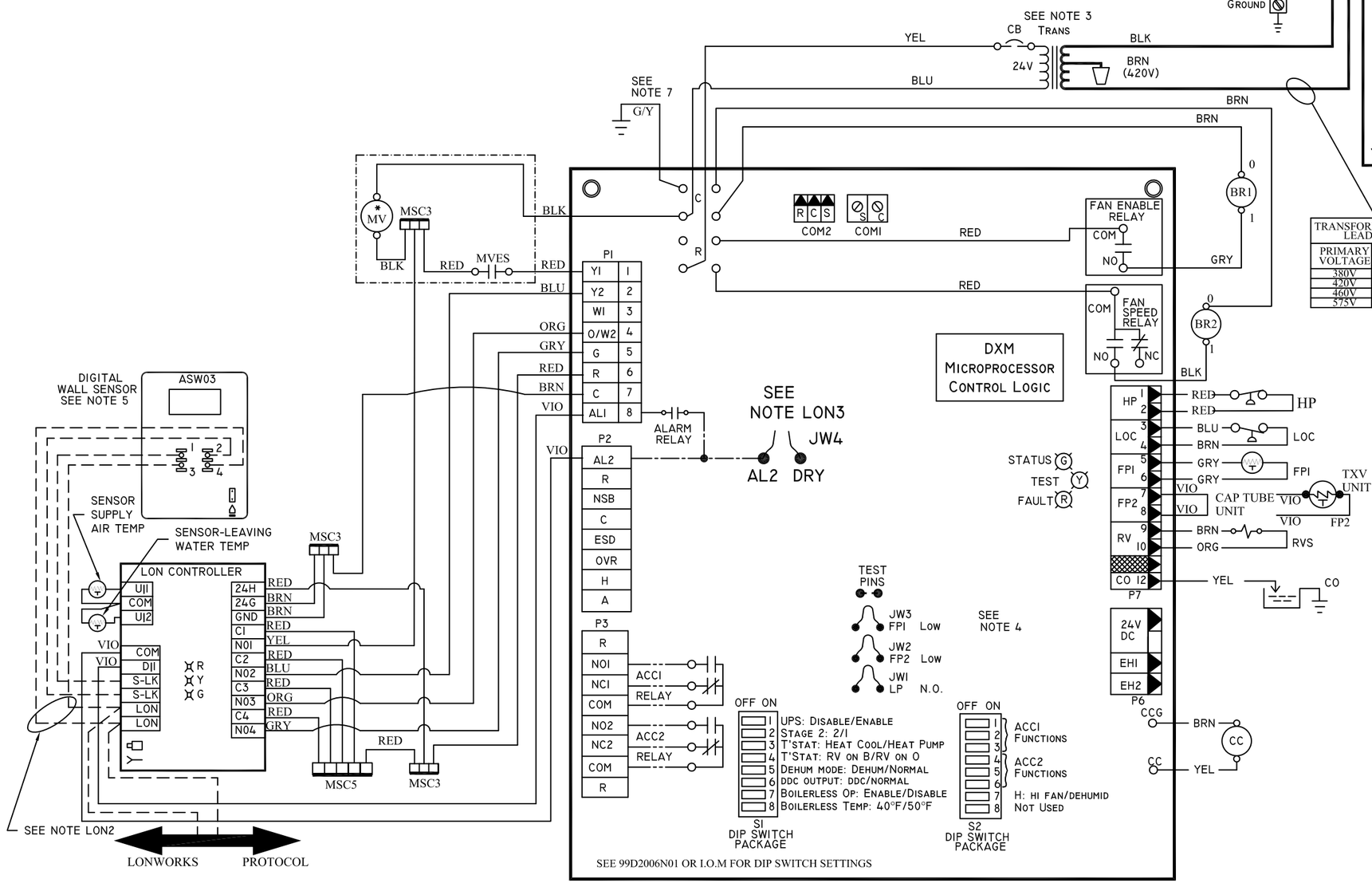

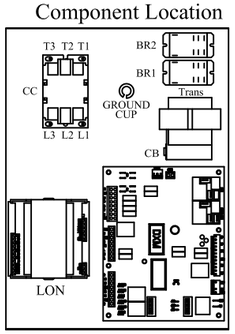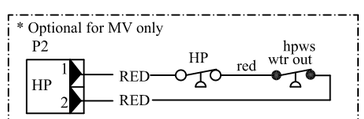
## Component Location