Legend	TITLE: 09-36 LABEL CABINET W/D, 208-230/60/1, 265/60/1 PSC w/LON	PCN 21-0173	DATE: 4/18/22	DRAWING NO. 96B0135N11	REV D

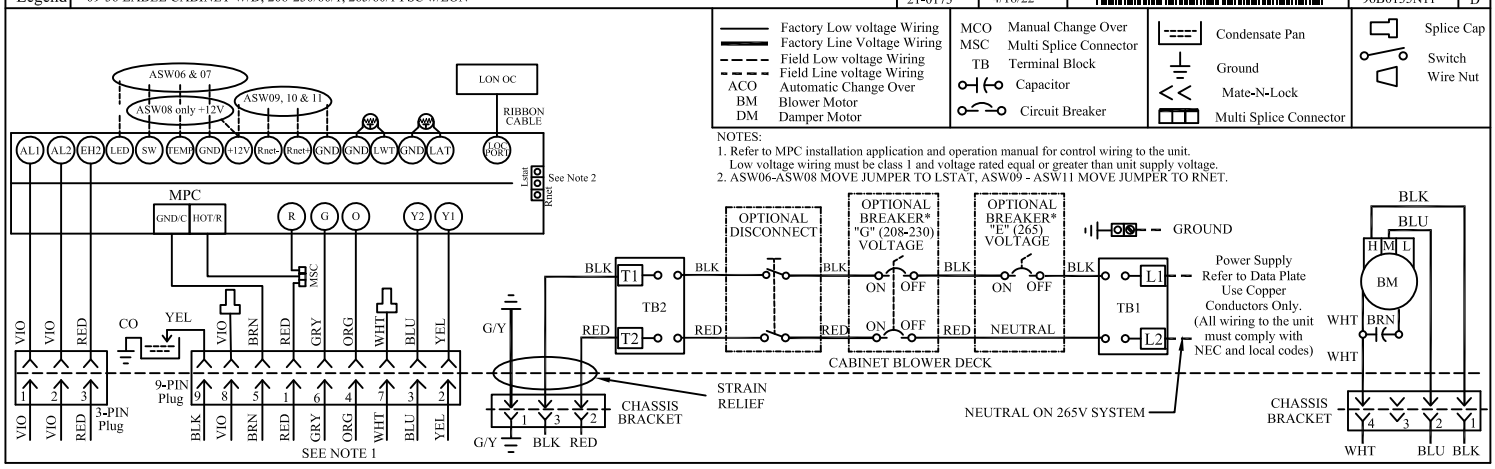

Legend	TITLE: 09-36 LABEL CABINET W/D, 208-230/60/1, 265/60/1 PSC w/LON	PCN 21-0173	DATE: 4/18/22	DRAWING NO. 96B0135N11	REV D

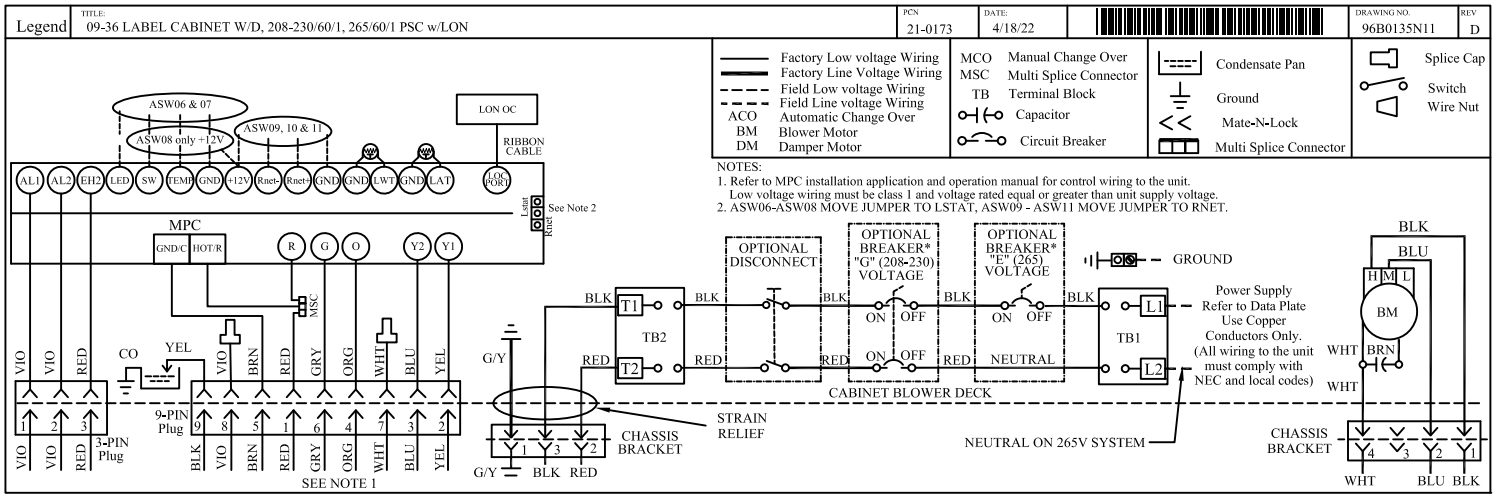

Legend	TITLE: 09-36 LABEL CABINET W/D, 208-230/60/1, 265/60/1 PSC w/LON	PCN 21-0173	DATE: 4/18/22	DRAWING NO. 96B0135N11	REV D

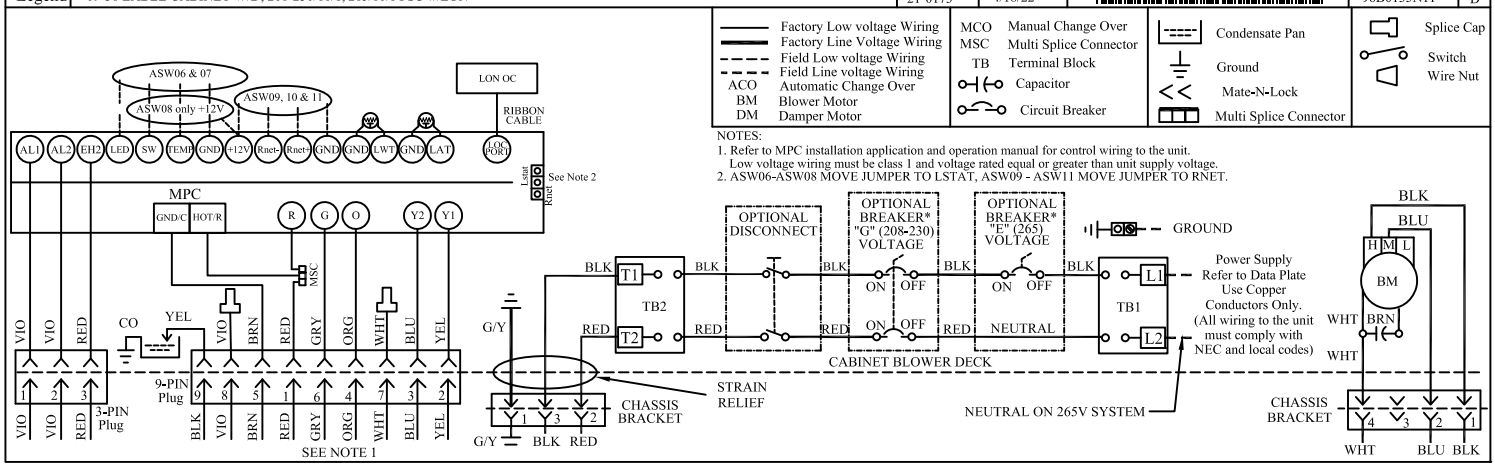
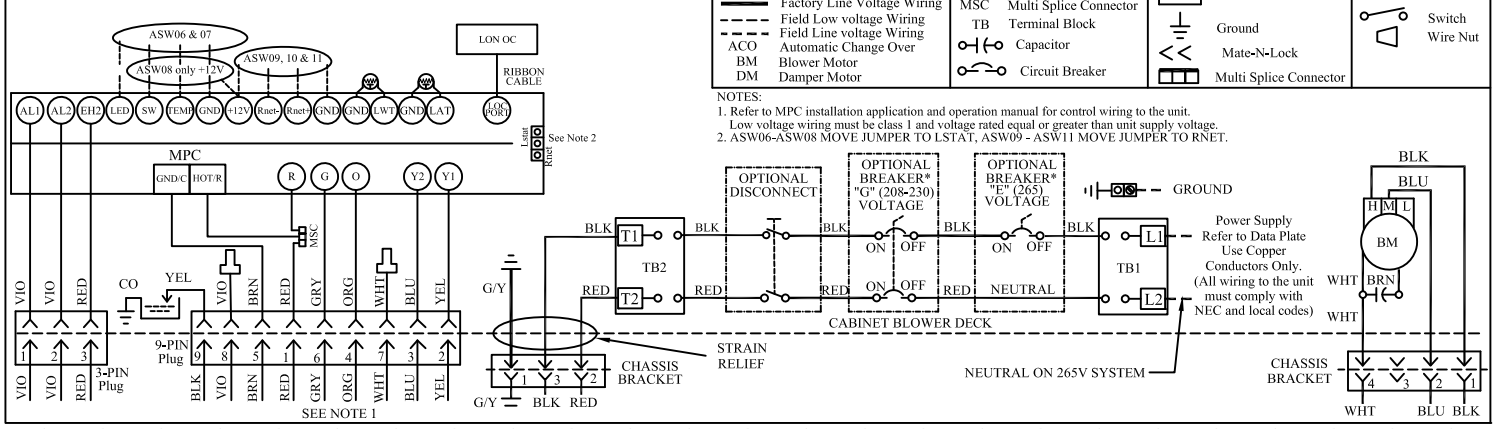
Legend	TITLE: 09-36 LABEL CABINET W/D, 208-230/60/1, 265/60/1 PSC w/LON	PCN 21-0173	DATE: 4/18/22	DRAWING NO. 96B0135N11	REV D