Legend

TITLE:	PCN	DATE:	DRAWING NO.	REV
09-36 LABEL CABINET W/D, 208-230/60/1, 265/60/1 w/PSC SURFACE MOUNT TSTAT	21-0104	5/6/21	96B0135N07	C

- Factory Low voltage Wiring
- Factory Line Voltage Wiring
- Field Low voltage Wiring
- Field Line voltage Wiring
- ACO Automatic Change Over
- BM Blower Motor
- DM Damper Motor
- MCO Manual Change Over
- MSC Multi Splice Connector
- TB Terminal Block
- Capacitor
- Circuit Breaker
- Condensate Pan
- Ground
- Mate-N-Lock
- Multi Splice Connector
- Switch
- Wire Nut

NOTE:
1. TYPICAL TSTAT WIRING SHOWN. REFER TO TSTAT IOM FOR WIRING TO THE UNIT.

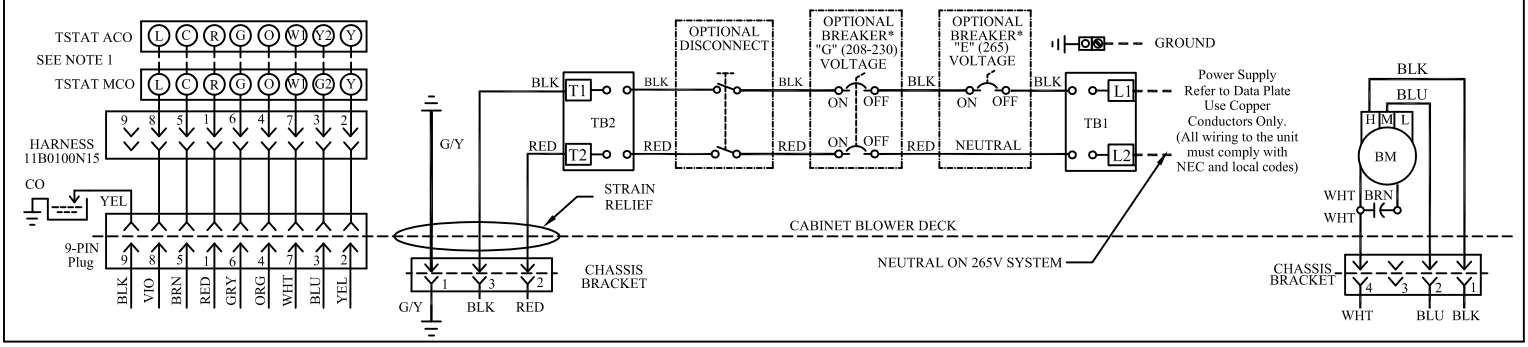

Legend

TITLE:	PCN	DATE:	DRAWING NO.	REV
09-36 LABEL CABINET W/D, 208-230/60/1, 265/60/1 w/PSC SURFACE MOUNT TSTAT	21-0104	5/6/21	96B0135N07	C

- Factory Low voltage Wiring
- Factory Line Voltage Wiring
- Field Low voltage Wiring
- Field Line voltage Wiring
- ACO Automatic Change Over
- BM Blower Motor
- DM Damper Motor
- MCO Manual Change Over
- MSC Multi Splice Connector
- TB Terminal Block
- Capacitor
- Circuit Breaker
- Condensate Pan
- Ground
- Mate-N-Lock
- Multi Splice Connector
- Switch
- Wire Nut

NOTE:
1. TYPICAL TSTAT WIRING SHOWN. REFER TO TSTAT IOM FOR WIRING TO THE UNIT.

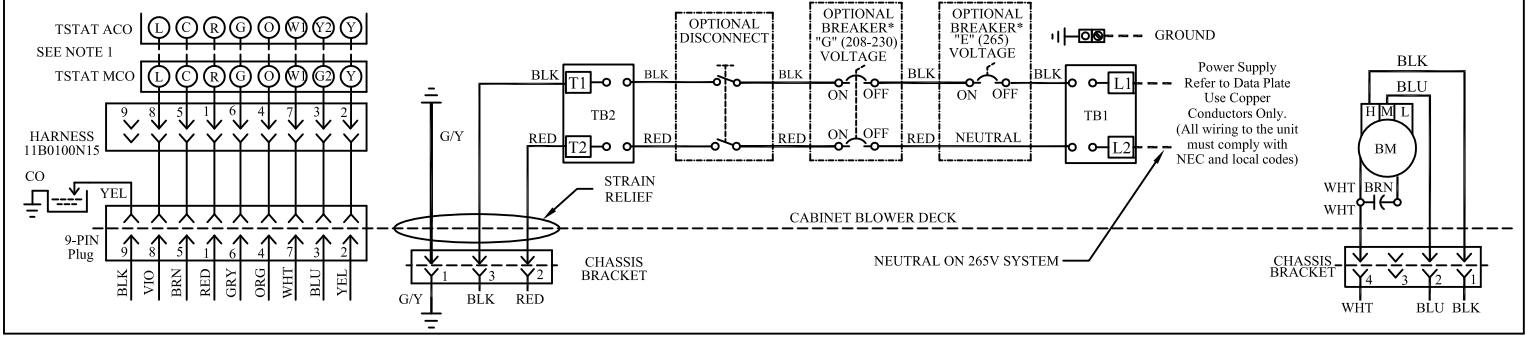

Legend

TITLE:	PCN	DATE:	DRAWING NO.	REV
09-36 LABEL CABINET W/D, 208-230/60/1, 265/60/1 w/PSC SURFACE MOUNT TSTAT	21-0104	5/6/21	96B0135N07	C

- Factory Low voltage Wiring
- Factory Line Voltage Wiring
- Field Low voltage Wiring
- Field Line voltage Wiring
- ACO Automatic Change Over
- BM Blower Motor
- DM Damper Motor
- MCO Manual Change Over
- MSC Multi Splice Connector
- TB Terminal Block
- Capacitor
- Circuit Breaker
- Condensate Pan
- Ground
- Mate-N-Lock
- Multi Splice Connector
- Switch
- Wire Nut

NOTE:
1. TYPICAL TSTAT WIRING SHOWN. REFER TO TSTAT IOM FOR WIRING TO THE UNIT.

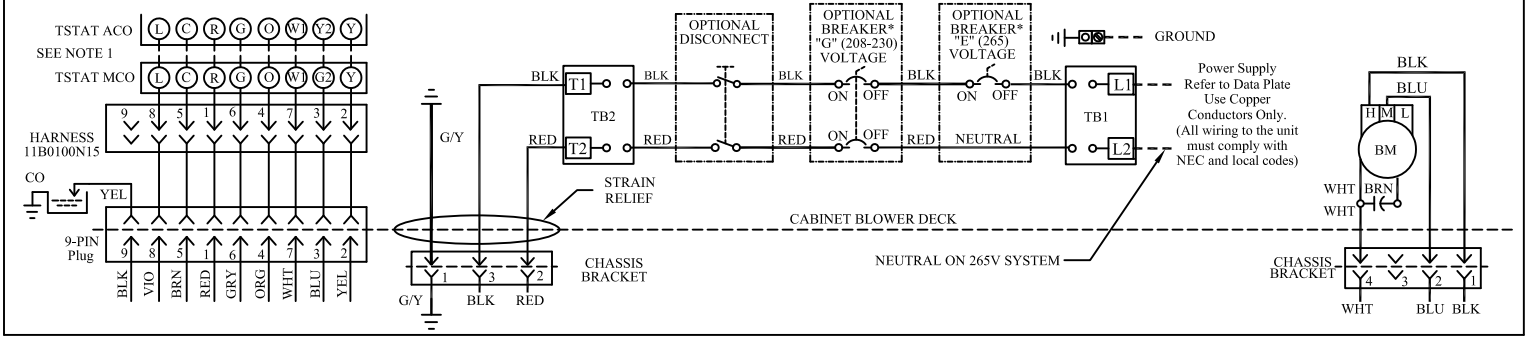

Legend

TITLE:	PCN	DATE:	DRAWING NO.	REV
09-36 LABEL CABINET W/D, 208-230/60/1, 265/60/1 w/PSC SURFACE MOUNT TSTAT	21-0104	5/6/21	96B0135N07	C

- Factory Low voltage Wiring
- Factory Line Voltage Wiring
- Field Low voltage Wiring
- Field Line voltage Wiring
- ACO Automatic Change Over
- BM Blower Motor
- DM Damper Motor
- MCO Manual Change Over
- MSC Multi Splice Connector
- TB Terminal Block
- Capacitor
- Circuit Breaker
- Condensate Pan
- Ground
- Mate-N-Lock
- Multi Splice Connector
- Switch
- Wire Nut
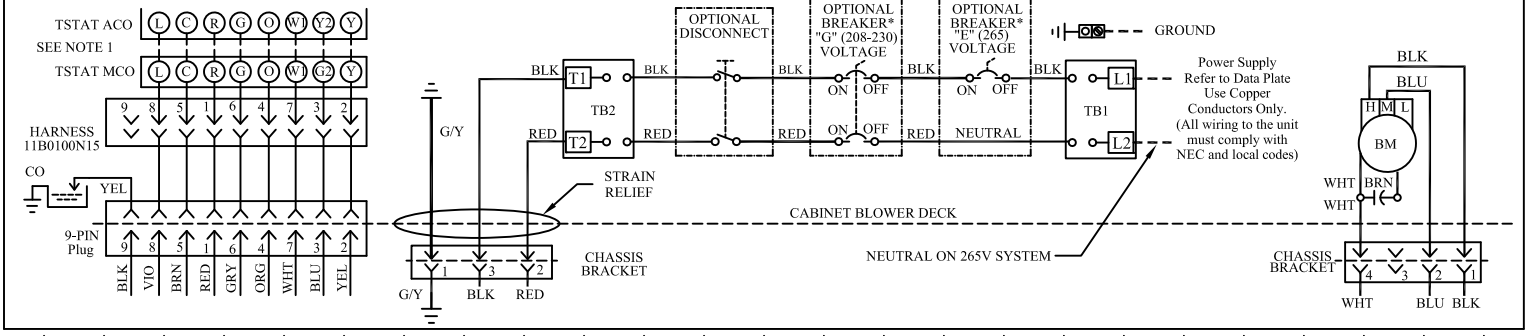
NOTE:
1. TYPICAL TSTAT WIRING SHOWN. REFER TO TSTAT IOM FOR WIRING TO THE UNIT.